OAM Series
Open Frame Motors

AC Motors - 115, 230V

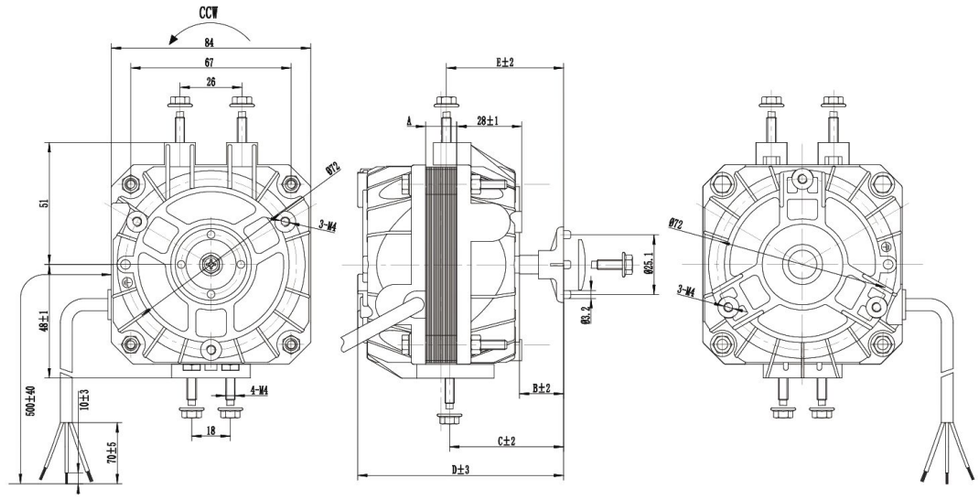

Housing	Die Cast Aluminum
Connection	3x Wire Leads, 500mm long
Motor	Single Phase Shaded Pole AC, Impedance or Thermal Protected, Class H Insulation, IP42 Protection Class
Bearing System	Dual Ball Bearings
Dielectric Strength	500VAC/min, <1mA
Insulation Resistance	≥10M Ohm @ 500 VAC

Operating Temperature
-30°C ~ +60°C

Storage Temperature
-40°C ~ +70°C

Available Accessories
Motor Support Brackets (BRK-)
Aluminum Impellers (IMP-)
Metal Safety Grille (G250-17)

Certifications
UL/cUL
VDE
CE
UKCA

Model Number	Rated Voltage (Volts AC)	Voltage Range (Volts AC)	Rated Input Power (W)	Output Power (W)	Rated Current (A)	Rated Speed (RPM)	Max Impeller Size (⌀ mm)	Weight (lbs)	A (mm)	B (mm)	C (mm)	D (mm)	E (mm)
OAM82AN-11-1WB	115	110-130	33	5	0.21	1500	200	1.8	13	20	49	85	50
OAM92AN-11-2WB	115	110-130	38	7	0.23	1500	230	2.4	19	19	51	90	53
OAM92AN-11-1WB	115	110-130	40	10	0.25	1500	230	2.4	19	19	51	90	53
OAM97AN-11-1WB	115	110-130	60	16	0.70	1500	250	3.0	25	17	47	94	57
OAM92AN-22-1WB	230	220-240	40	10	0.25	1500	230	2.4	19	19	51	90	53
OAM105AN-22-1WB	230	220-240	73	18	0.50	1500	250	3.3	30	21	52	103	65
OAM114AN-22-1WB	230	220-240	95	25	0.70	1500	300	4.0	40	18	48	110	74
OAM125AN-22-1WB	230	220-240	120	34	0.60	1500	300	4.4	45	25	118	123	60

* Electrical values shown are for 60 Hz operation.

Knight Electronics, Inc.
10557 Metric Drive
Dallas, TX 75243
214-340-0265

Revised 3/29/2022
m8

Orion Fans
Information and data is subject to change without prior notification