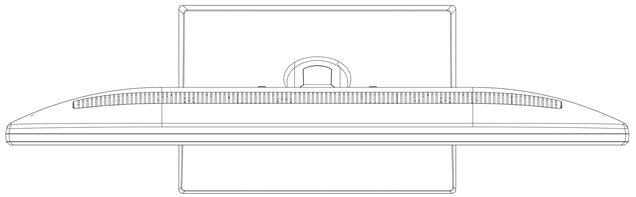

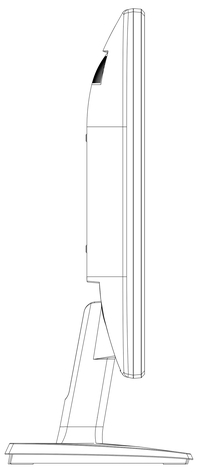

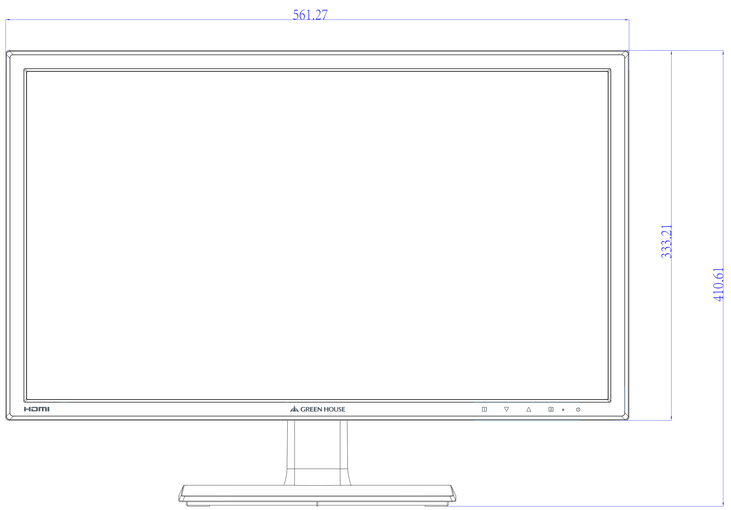

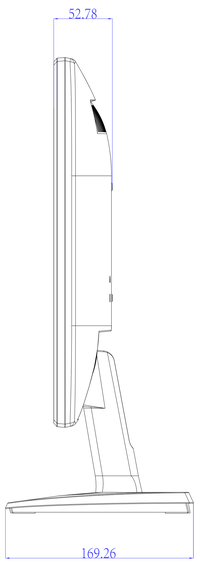

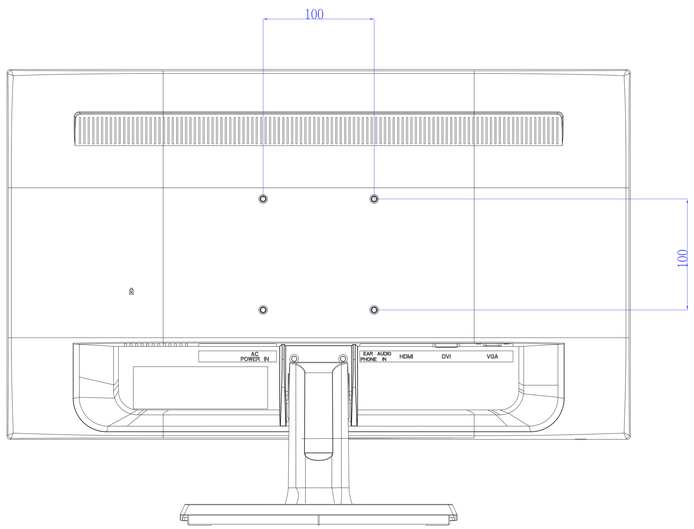

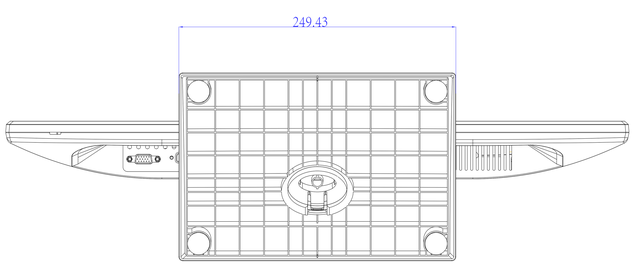

GREEN HOUSE™

MODEL No.

GH-LCW24B