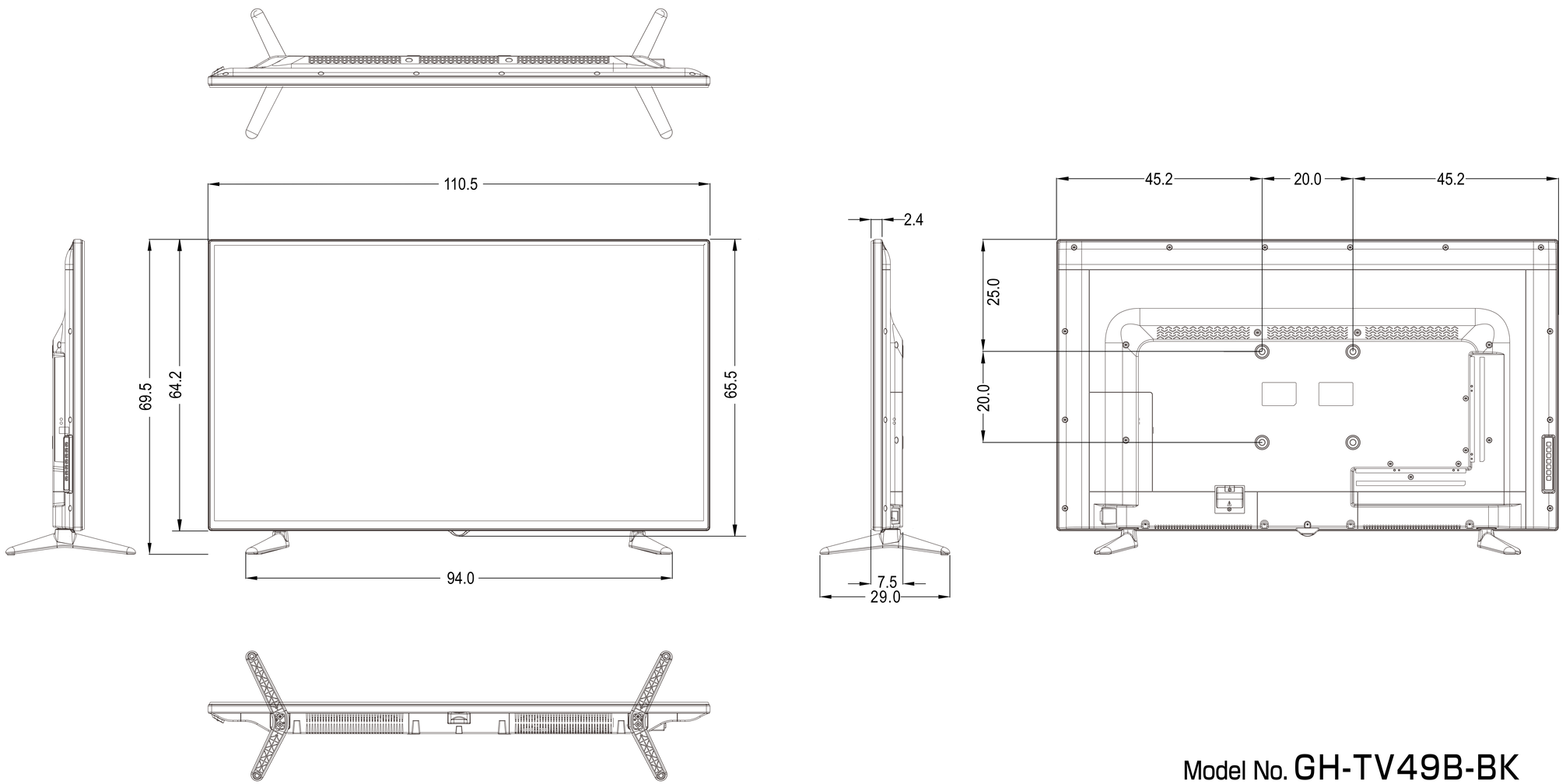

Model No. GH-TV49B-BK

GREEN HOUSE